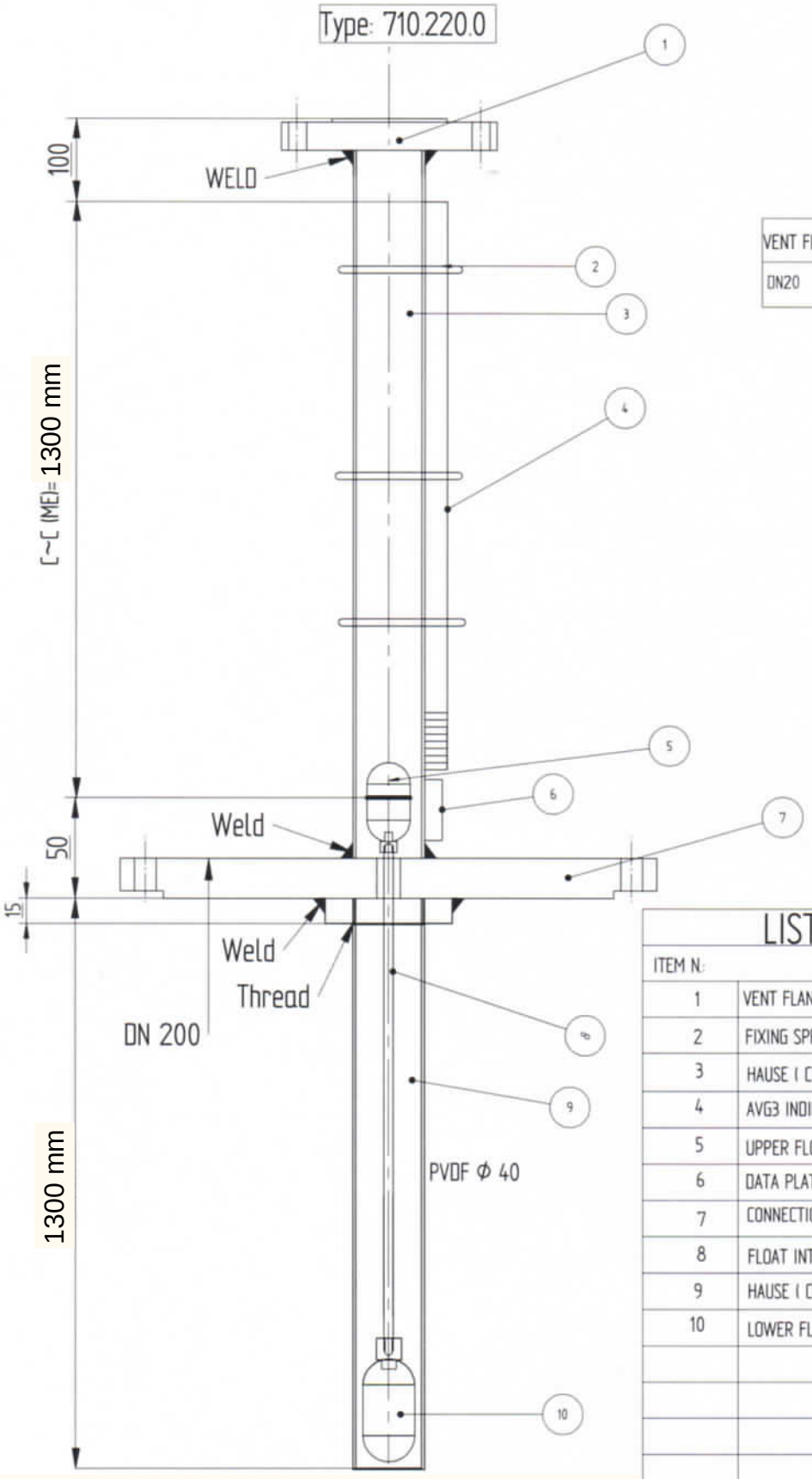

VENT FLANGE	C~C (ME)	PROCESS CONN. FLANGE
DN20	1300 mm	DN200

LIST OF PARTS

ITEM N.	DENOMINATION	
1	VENT FLANGE DN20	PVDF
2	FIXING SPRINGE	STEEL
3	HAUSE (CHAMBER)	PVDF
4	AVG3 INDICATOR	ALUMINIUM
5	UPPER FLOAT	PVDF
6	DATA PLATE	PVDF
7	CONNECTION FLANGE	PVDF
8	FLOAT INTERCON ROD	Ti Gr2
9	HAUSE (CHAMBER)	PVDF
10	LOWER FLOAT	PVDF